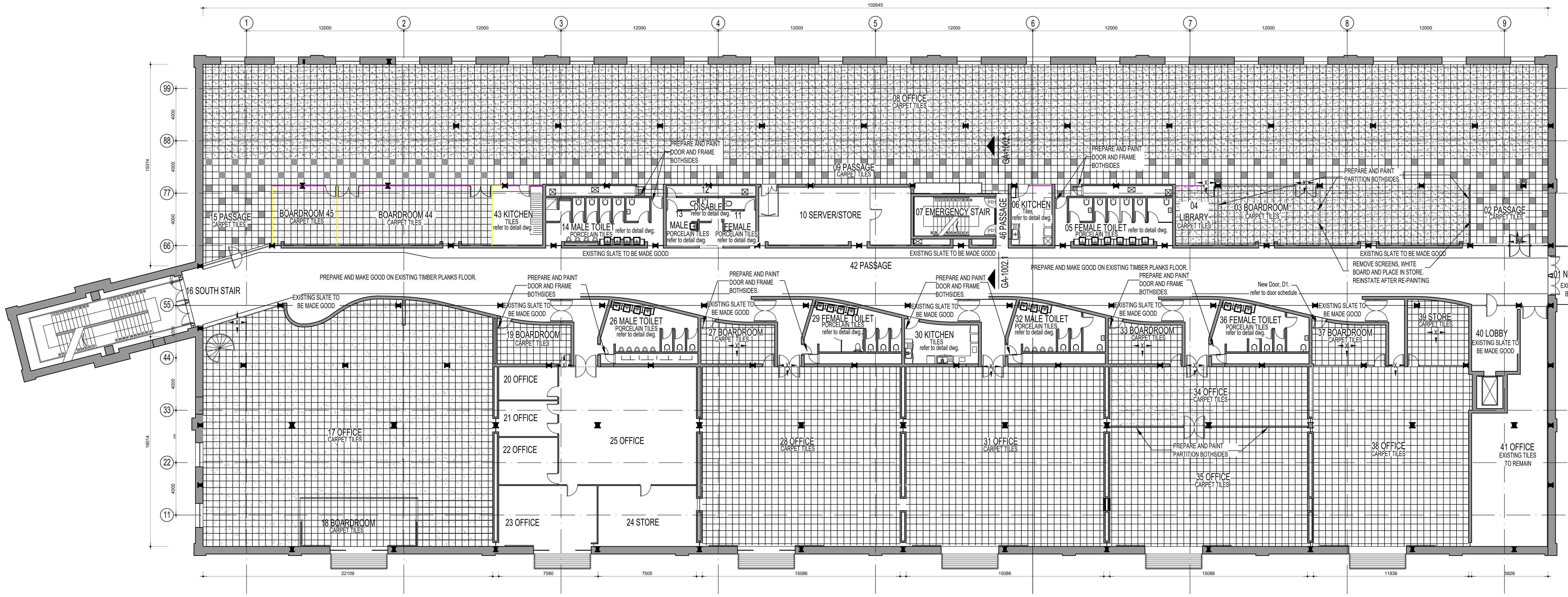

PROPOSED FLOOR FINISHES LAYOUT PLAN

FIRST STOREY LAYOUT

SCALE 1:150

LEGEND	
SYMBOL	NAME
	FIT NEW 500X500 Beber Point 920 Nexbac. col Tactic 10% PASSAGES
	FIT NEW 500X500 Beber Point 920 Nexbac. col Polish OFFICES 100% & PASSAGES 90%
	FIT NEW 500X500 Accelarate - Boost - Col. Strength BOARDROOMS 100%
	TILE START POINT AND DIRECTION

GENERAL NOTES

CARPETS:
Existing Carpet tiles to be removed very carefully to avoid any damage on underlaying cabling and no cutting through the floor

TRANSITION STRIPS
Install transition aluminium strips to every change of different floor finish.

DRY WALL:
89mm GYPROC bespoke non-load bearing fire rated drywall system. Technical fire check plasterboard, one layer on each side. 63mm insulation Isover cavity Batts.
Prepare, prime and paint with min 2 coats washable paint with a 15 year guarantee colour white.
75mm Anodise Aluminium skirting to colour silver grey. To be install by approved specialist. Provide all necessary fixings, fittings, accessories as per manufacturer's instruction.
Dimensions on this drawing shall be verified on site before installation.

EXISTING DOORS:
All semi-hardwood or hardwood single doors and double doors, and frames to be prepared and painted wih min 2 coats Plascon Velvaglo. Colour to Atchitects' specification.
Existing signage on doors to be reinstated after repairs and painting.
Existing ironmongery to be reinstated after repairs and painting.

BALCONIES:
Missing planks to be replaced. Make repairs to damaged planks, to match existing.
Balustrades to be polished.

EDGE TRIMS:
Install stainless steel edge trims to edge of corners and and on any exposed tile edges.

NOTES

1. DO NOT SCALE DRAWING - ONLY DIMENSIONS SHOWN TO BE USED.
2. THE CONTRACTOR SHALL VERIFY ALL CONDITIONS, DIMENSIONS AND LEVELS ON THE SITE AND NOTIFY THE NEC SUPERVISOR OF ANY VARIATIONS BEFORE CONSTRUCTION.
3. ALL LEVELS ARE IN METERS TO MEAN SEA LEVEL
4. WHERE BRAND OR TRADE NAMES ARE SPECIFIED EQUIVALENT AND APPROVED PRODUCTS MAY BE CONSIDERED BY THE PROJECT TEAM. THE MANUFACTURERS PRODUCT MANUALS, GUARANTEE; INFORMATION SHEETS OR DATA SHEETS MUST BE SUBMITTED FOR REVIEW AND APPROVAL PRIOR TO CONSTRUCTION, INSTALLATION OR MANUFACTURE.

FINISHES SCHEDULE

Where brand or trade names are specified equivalent and approved products may be considered by the project team. The manufacturers product manuals, guarantee; information sheets or data sheets must be submitted for review and approval prior to construction, installation or manufacture.

Element	Specification	01 NORTH STAIR	02 PASSAGE	03 BOARDROOM	04 LIBRARY	05 FEMALE TOILET	06 KITCHEN	07 EMERGENCY STAIR	08 OFFICE	09 PASSAGE	10 SERVER/STORE	11 FEMALE TOILET	12 DISABLED TOILET	13 MALE TOILET	14 MALE TOILET	15 PASSAGE	16 SOUTH STAIR	17 OFFICE	18 BOARDROOM	19 BOARDROOM	20 OFFICE	21 OFFICE	22 OFFICE	23 OFFICE	24 STORE	25 OFFICE	26 MALE TOILET	27 BOARDROOM	28 OFFICE	29 FEMALE TOILET	30 KITCHEN	31 OFFICE	32 MALE TOILET	33 BOARDROOM	34 OFFICE	35 OFFICE	36 FEMALE TOILET	37 BOARDROOM	38 OFFICE	39 STORE	40 LOBBY	41 OFFICE	42 PASSAGE	43 KITCHEN	44 BOARDROOM	45 BOARDROOM	46 PASSAGE
FLOORS	**Carpet Tiles:** Existing substrate to be made good. Substrate to be finished with self levelling screed isocrete k-screed as per flowcrete. Fit New 500 x 500 mm carpet tiles, manufactured from Stainproof SDX (Solution Dyed nylon-6 for extreme conditions) heavy commercial tiles to be used. Colour variance choice by architect. bitumen backed, manufactured from stainproof miracle Fibre (Polypropylene). This product is to be laid in accordance with SANS 10186 fitting code of practice. Installed in tessellated format only. 75x19mm Hardwood meranti skirtings to be prepared, primed and painted, using sponge roller, with min 2 finishing coats 100% gloss enamel, chip resistant and washable paint. Deep colour to architects specification.			○															○	○								○						○				○							○	○	
FLOORS	**Carpet Tiles:** Existing substrate to be made good. Substrate to be finished with self levelling screed isocrete k-screed as per flowcrete. Fit New 500 x 500 mm carpet tiles, manufactured from Stainproof SDX (Solution Dyed nylon-6 for extreme conditions) heavy commercial tiles to be used. Colour variance choice by architect bitumen backed, manufactured from stainproof miracle Fibre (Polypropylene). This product is to be laid in accordance with SANS 10186 fitting code of practice. Installed in tessellated format only. 75x19mm Hardwood meranti skirtings to be prepared, primed and painted, using sponge roller, with min 2 finishing coats 100% gloss enamel, chip resistant and washable paint. Deep colour to architects specification.		○		○				○	○						○		○											○			○			○	○			○			○	○				○
FLOORS	**Carpet Tiles:** Existing substrate to be made good. Substrate to be finished with self levelling screed isocrete k-screed as per flowcrete. Fit New 500 x 500 mm carpet tiles, manufactured from Stainproof SDX (Solution Dyed nylon-6 for extreme conditions) heavy commercial tiles to be used. Colour variance choice by architect. bitumen backed, manufactured from stainproof miracle Fibre (Polypropylene). This product is to be laid in accordance with SANS 10186 fitting code of practice. Installed in tessellated format only. 75x19mm Hardwood meranti skirtings to be prepared, primed and painted, using sponge roller, with min 2 finishing coats 100% gloss enamel, chip resistant and washable paint. Deep colour to architects specification.		○							○						○																											○				○
FLOORS	**Tiles:** Full body porcelain tile with a PEI rating of 5. Matt Glazed Porcelain Tile 600 x 600mm. Allow a prime cost of R600.00 per square for supply only.Provide tile expansion strip at every 3m vertical and 3m horizontal as per `Kirk marketing`equivalent and approved code ASSJ170R.08 : Aluminium Movement Joints or stainless steel.					○						○	○	○	○												○			○			○				○										
FLOORS	**Tiles:** 895mm X 220mm Ampezzo Whitewashed heavy commercial, 1st grade, rectified porcelain tiles. Allow a prime cost of R600.00 per square for supply only. Installed on a well prepared new flat screed self levelling screed Isocrete K-screed as per flowcrete.						○																								○													○			
SKIRTING	**Aluminium:** 75mm Anodised Aluminium to both sides of partition.	○														○																												○	○	○	○
SKIRTING	**Hardwood:** 75mm x 19mm Hardwood meranti skirting, primed and painted.		○						○							○		○																													
SKIRTING	**Tile:** 100mm Cut tile as per floor	○					○																								○													○			
WALLS	**Paint:** New and Existing painted surfaces to be prepared and painted with min 2 finishing coats of PEM 1000, white plus Professional Superior Low Sheen Paint or similar & approved on well prepared substrate, to be free of all defects. PP700 Professional Gypsum & plaster primer or similar & approved to be applied to substrate. Application to be done in strict accordance with manufacturers instruction.	○	○	○	○		○	○	○	○	○					○		○	○	○								○	○		○	○		○	○	○		○	○	○	○	○	○	○	○	○	○
WALLS	**Tiles:** 600mm x 1200mm Angelo Straturio polished porcelain tile by Italtile or similar & approved,installed from centre, installed as per manufactures specification. Sample to be provided for approval by architect prior to installation allow R650/sqm excl. grout and installation. Grout colour : Dove grey. Tiles to be installed with 'Goldstar / Tal' porcelain GR1 adhesive					○						○	○	○	○												○			○			○				○							○			
CEILING	**Paint:** New and Existing painted surfaces to be prepared and painted with min 2 finishing coats of PEM 1000, White Plus Professional Superior Low Sheen Paint or similar & approved on well prepared substrate, to be free of all defects. PP700 Professional Gypsum & Plaster Primer or similar & approved to be applied to substrate. Application to be done in strict accordance with manufacturers instruction.	○		○	○	○		○				○	○	○	○												○			○			○				○								○	○	○
CEILING	**Grid Tiles:** Acoustic Sinfonia white premium biologically absorbable mineral wool ceiling tiles or similar & approved, NRC - 0.85, CAC - 30db, fire classification a2-s1, D0, weight - 3.5 kg/m², size 600 x 600x 15mm and white painted finish, laid on OWA lines15b exposed demountable suspension system, comprising galvanised main tees and cross tees with main tees suspended by means of galvanised hangers at centres not exceeding 1200mm, and all installed to manufacturer's instructions. Provide construct shadowline w-trim, plugged and screwed at centres not exceeding 200mm.	○																		○								○			○			○				○									
CEILING	**Rhinoboard:** 12mm thick rhinoboard screwed on purlins with drywall screws. All joints to be taped and skimmed. Rhinoboard to be painted. 152mm x 38mm rafters spaced 600mm centre to centre. Purlins fixed on underside of rafters spaced at 600mm centre to centre.																														○														○	○	
STEEL COLUMNS & BEAMS	**Paint:** Selected columns and beams on Ground floor. See Ground floor for reference. Existing painted surfaces to be prepared and painted with min 2 finishing coats of VLW Plus 100% enamel paint, chip resistant and washable on well prepared substrate, to be free of all defects. Steeltect 1200 WB (GIP1) spot primer & professional all purpose undercoat (PU 800) or similar & approved to be applied to substrate . Application to be done in strict accordance with manufacturers instruction. Deep colour To match existing.																																														
CONDUIT CABINET	**SUPAMATT BOARD:** 16mm thick, storm grey supamatt board cut to size, with seamless storm grey supamatt edging all round. Top (x1) and side panels, one long & one short (x2) fixed with chipboard screws, cover headscrews with matching screw covers.									○																																					

DOOR NO :

FD1: FIRE DOOR

RH : 1
LH : 1
2

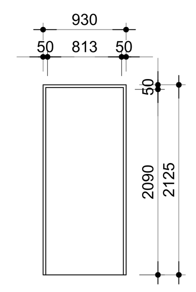

Where brand or trade names are specified equivalent and approved products may be considered by the project team. The manufacturers product manuals, guarantee; information sheets or data sheets must be submitted for review and approval prior to construction, installation or manufacture.

DOOR		Supply and install 46mm thick pyropanel fire rated doorset in struct accordance to sans 1253:2016 with commercial plywood including an intumescent strip to top of door. Doorset comprises hinged to a 1.6mm steel frame.
FINISH		Prepare & paint with polyurethane silk enamel, colour `Plascon' White
FRAME		Steel frame with single rebate to suit 230mm brickwork as per 'Bitcon Industries'
FINISH		Prepare & paint with polyurethane silk enamel, colour colour `Plascon' White
IRONMONGERY	HANDLES & LOCKSET	Dormakaba 102 x 75 x 3mm, EN1935 grade 13, two ball bearing butt hinge. Fire rated. 120kg carrying capacity per pair. Finish: stainless steel
IRONMONGERY	HINGES	Dormakaba en 3/4 cam action door closer with standard non hold open slide channel arm. EN1154, certified to iso 9001. Hydraulic speed control and backcheck. Standard pull side fixing, transom push-side fixing. EN3 suitable for door width 850-950mm, en4 suitable for door width 950-1100mm. Fire rated: certi fire approved (cf 119) for door types itt 120,mm/imm 240. (not certified on push face)
IRONMONGERY	DOORSTOP	Dormakaba one point locking panic bar - single door - door leaf 1000mm wide (3101)
IRONMONGERY	GENERAL	

NEW FIRE PASSAGE : FIRST FLOOR

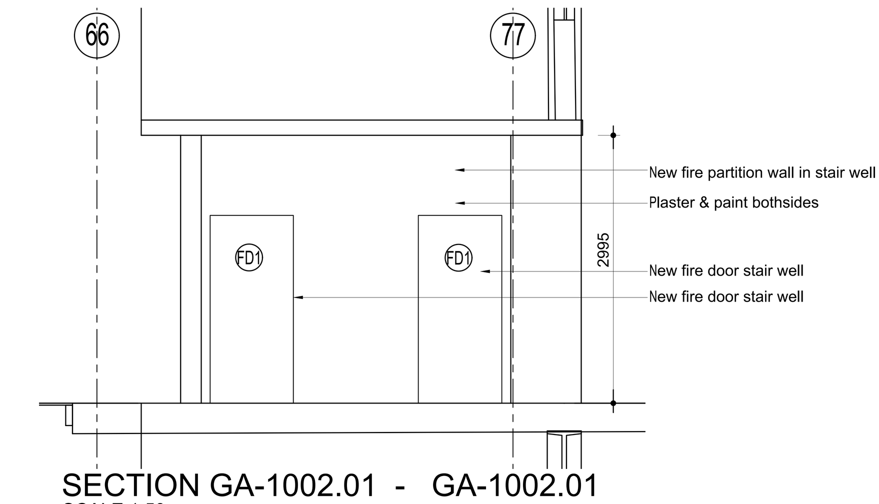

SECTION GA-1002.01 - GA-1002.01

SCALE 1:50

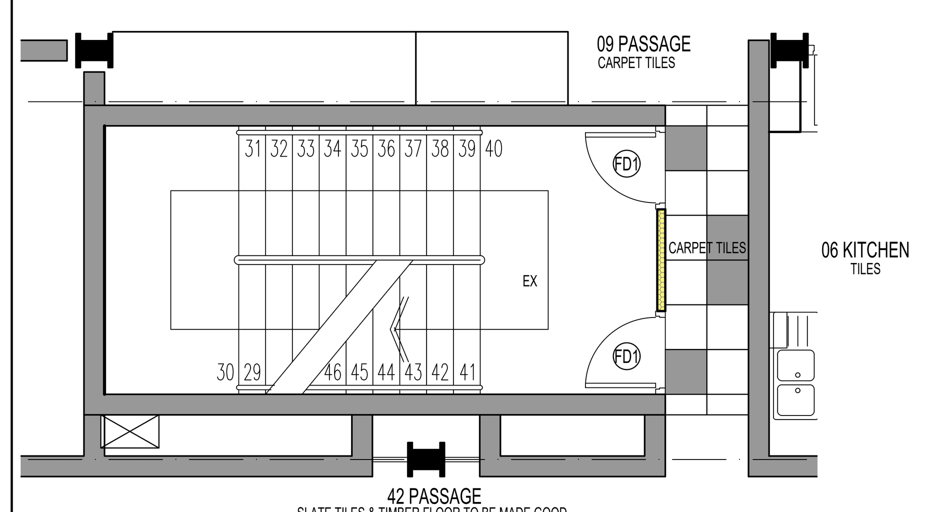

NEW FIRE PASSAGE

DETAIL LAYOUT GA - 1002.01

SCALE 1:50

REFERENCE DRAWINGS

DRAWING NO.	REFERENCE
XDN.E.037-1-100-A-DE-1009-01-0B	SCREEN DETAIL
XDN.E.037-1-100-A-DE-1008-01-0B	CEILING DETAIL
XDN.E.037-1-100-A-DE-1007-01-0B	ABLUTION 07 DETAILS
XDN.E.037-1-100-A-DE-1006-01-0B	ABLUTION 06 DETAILS
XDN.E.037-1-100-A-DE-1005-01-0B	ABLUTION 05 DETAILS
XDN.E.037-1-100-A-DE-1004-01-0B	ABLUTION 04 DETAILS
XDN.E.037-1-100-A-DE-1003-01-0B	ABLUTION 03 DETAILS
XDN.E.037-1-100-A-DE-1002-01-0B	ABLUTION 02 DETAILS
XDN.E.037-1-100-A-DE-1001-01-0B	ABLUTION 01 DETAILS
XDN.E.037-1-100-A-LA-1003-01-0B	PASSAGE LAYOUT & DETAILS
XDN.E.037-1-100-A-LA-1002-01-0B	RED SECTION KITCHEN DETAIL
XDN.E.037-1-100-A-LA-1001-01-0B	ENGINEERING KITCHEN DETAIL
XDN.E.037-1-100-A-GA-1001-01-0B	FIRST STOREY DEMOLITION PL

FOR TENDER

NO.	DESCRIPTION	BY	CHKD	APPD	DATE
0D	ISSUED FOR TENDER				2025-10-17
0C	ISSUED TO QS				2025-08-25
0B	ISSUED FOR TENDER				2024-11-29
	ISSUED FOR SQUAD CHECK				2024-11-06
0A	ISSUED FOR TENDER				2023-03-03

REVISIONS

This Document including all design and information therein is Confidential Intellectual Property of Transnet. Copyright and all other rights are reserved by Transnet. This Document may only be used for its intended purpose.

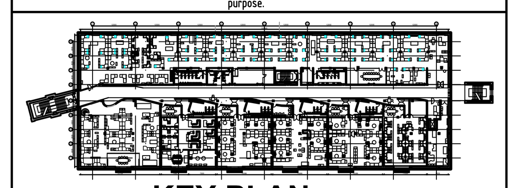

KEY PLAN
1:1250

CONTRACTOR / CONSULTANT

TITLE	NAME	SIGN	DATE
DRAWN	.		. . .
CHECKED	.		
DESIGNED	.		. . .
CHECKED	.		

PR.ENG. / PR.TECH./PR. ARCH

NAME		DATE
SIGNATURE		. . .
REG. NUMBER		
TITLE		

TRANSNET NATIONAL PORTS AUTHORITY

TITLE	NAME	SIGN	DATE
DRAWN	ZZ	[signature]	17 10 2025
CHECKED	AN	[signature]	17 10 2025
DESIGNED			
CHECKED			

PR.ENG. / PR.TECH./PR. ARCH

NAME	Mr. N Nagan	DATE
SIGNATURE	[signature]	17 10 2025
REG. NUMBER		
SCALE	AS SHOWN	

TRANSNET
Transnet National Ports Authority
TRANSNET SOC Ltd : REG No. 1990/000900/30
(237 MAHATMA GANDHI RD, POINT, 4001)
(DURBAN) TEL: 031 361 1791

PROJECT / AREA / ASSET / SUBJECT/DRAWING TITLE

PORT OF DURBAN

REFURBISHMENT TO QUEENS WAREHOUSE
FIRST STOREY
PROPOSED LAYOUT PLAN

PAPER SIZE	TRANSNET DRW. NO.	REV.
A0	XDN.E.0037-1-100-A-GA-1002-01	0D
	PROJECT DRG. NO.	REV.